# Data sheet | Item number: 231-333/001-000

THT male header; 1.0 x 1.0 mm solder pin; straight; Pin spacing 5.08 mm; 3-pole; orange

https://www.wago.com/231-333/001-000

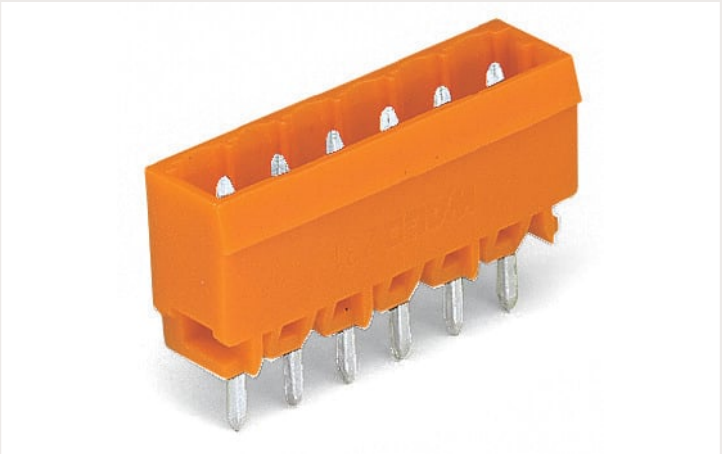

Color: orange

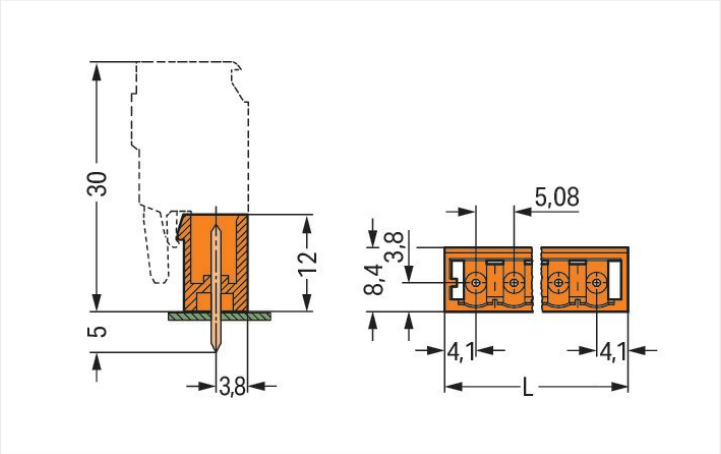


Dimensions in mm
L = (pole no. – 1) x pin spacing + 8.2 mm

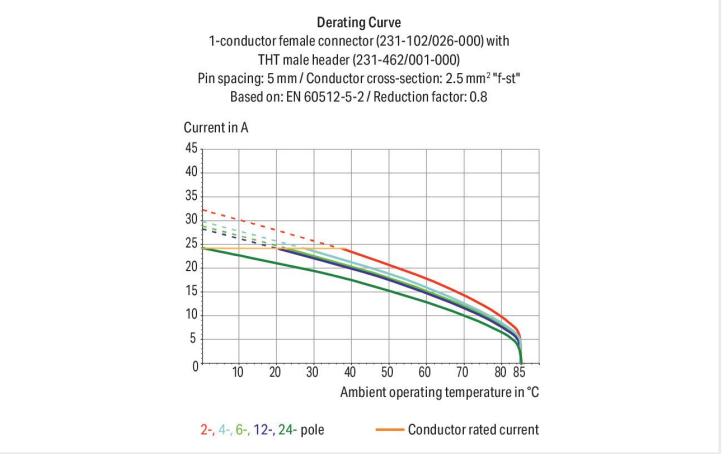


- Horizontal or vertical PCB mounting via straight or angled solder pins
- Pin cross-section: 1 x 1 mm
- With coding fingers

## Notes

| | |
|---|---|
| Safety information 1 | The *MCS – MULTI CONNECTION SYSTEM* includes connectors without breaking capacity in accordance with DIN EN 61984. When used as intended, these connectors must not be connected/disconnected when live or under load.When used as intended, these connectors must not be connected/disconnected when live or under load. The circuit design should ensure header pins, which can be touched, are not live when unmated. |
| Variants: | Other pole numbers<br>3.8 mm pin projection for male headers with straight solder pins<br>Gold-plated or partially gold-plated contact surfaces<br>Other versions (or variants) can be requested from WAGO Sales or configured at https://configurator.wago.com/. |

## Electrical data

### Ratings per IEC/EN

| | |
|---|---|
| Ratings per | IEC/EN 60664-1 |
| Nominal voltage (III/3) | 320 V |
| Rated impulse voltage (III/3) | 4 kV |
| Rated voltage (III/2) | 320 V |
| Rated impulse voltage (III/2) | 4 kV |
| Nominal voltage (II/2) | 630 V |
| Rated surge voltage (II/2) | 4 kV |
| Rated current | 12 A |
| Legend (ratings) | (III / 2) ≙ Overvoltage category III / Pollution degree 2 |

### Ratings per UL

| | |
|---|---|
| Approvals per | UL 1059 |
| Rated voltage UL (Use Group B) | 300 V |
| Rated current UL (Use Group B) | 10 A |
| Rated voltage UL (Use Group D) | 300 V |
| Rated current UL (Use Group D) | 10 A |

### Ratings per UL

| | |
|---|---|
| Rated voltage (UL 1977) | 600 V |
| Rated current UL 1977 | 10 A |

### Ratings per CSA

| | |
|---|---|
| Approvals per | CSA |
| Rated voltage CSA (Use Group B) | 300 V |
| Rated current CSA (Use Group B) | 10 A |
| Rated voltage CSA (Use Group D) | 300 V |
| Rated current CSA (Use Group D) | 10 A |

## Connection data

| | |
|---|---|
| Total number of potentials | 3 |
| Number of connection types | 1 |
| Number of levels | 1 |

### Connection 1

| | |
|---|---|
| Pole number | 3 |

## Physical data

| | |
|---|---|
| Pin spacing | 5.08 mm / 0.2 inch |
| Width | 18.36 mm / 0.726 inch |
| Height | 17 mm / 0.669 inch |
| Height from the surface | 12 mm / 0.472 inch |
| Depth | 8.4 mm / 0.331 inch |
| Solder pin length | 5 mm |
| Solder pin dimensions | 1 x 1 mm |
| Drilled hole diameter with tolerance | 1.4 $^{(+0.1)}$ mm |

## Mechanical data

| | |
|---|---|
| Variable coding | Yes |

## Plug-in connection

| | |
|---|---|
| Contact type (pluggable connector) | Male connector/plug |
| Connector (connection type) | for PCB |
| Mismating protection | No |
| Mating direction to the PCB | 90 ° |
| Locking of plug-in connection | none |


Continued on next page

## PCB contact

| | |
|---|---|
| PCB contact | THT |
| Solder pin arrangement | over the entire male connector (in-line) |
| Number of solder pins per potential | 1 |

## Material data

| | |
|---|---|
| Note (material data) | Information on material data can be found here |
| Color | orange |
| Material group | I |
| Insulation material | Polyamide (PA66) |
| Flammability class per UL94 | V0 |
| Contact material | Electrolytic copper ($E_{Cu}$) |
| Contact plating | Tin |
| Fire load | 0.02 MJ |
| Weight | 1 g |

## Environmental requirements

| | |
|---|---|
| Limit temperature range | -60 … +100 °C |

## Commercial data

| | |
|---|---|
| Product Group | 3 (Multi Conn. System) |
| eCl@ss 10.0 | 27-44-04-02 |
| eCl@ss 9.0 | 27-44-04-02 |
| ETIM 7.0 | EC002637 |
| ETIM 6.0 | EC002637 |
| PU (SPU) | 200 Stück |
| Packaging type | Box |
| Country of origin VKOrg Germany | PL |
| GTIN | 4044918865241 |
| Customs tariff number VKOrg Germany | 85366990990 |

## Approvals / Certificates

### Country specific Approvals

| Approval | Standard | Certificate name |
|---|---|---|
| CB<br>DEKRA Certification B.V. | IEC 61984 | NL-39756 |
| CSA<br>DEKRA Certification B.V. | C22.2 | 1466354 |
| KEMA/KEUR<br>DEKRA Certification B.V. | EN 61984 | 2190761.01 |

### Ship Approvals

| Approval | Standard | Certificate name |
|---|---|---|
| ABS<br>American Bureau of Shipping | - | 19-HG1869876-PDA |


Continued on next page

## UL-Approvals

| Approval | Standard | Certificate name |
|---|---|---|
| UL<br>UL International Germany GmbH | UL 1977 | E45171 |
| UR<br>Underwriters Laboratories Inc. | UL 1059 | E45172 |

## Downloads

### Environmental Product Compliance

**Compliance Search**

Environmental Product Compliance
231-333/001-000

### Documentation

**Additional Information**

| | | |
|---|---|---|
| Technical Section | 03.04.2019 | pdf<br>1949.09 KB |

### CAD/CAE-Data

**CAD data**

2D/3D Models
231-333/001-000

**CAE data**

EPLAN Data Portal
231-333/001-000

ZUKEN Portal
231-333/001-000

## 1 Compatible products

### 1.1 Counterpart

#### 1.1.1 Female connector/socket



Item no.: 232-303/026-000
1-conductor female connector, angled; CAGE CLAMP®; 2.5 mm²; Pin spacing 5.08 mm; 3-pole; 2,50 mm²; orange



Item no.: 232-403/026-000
1-conductor female connector, angled; CAGE CLAMP®; 2.5 mm²; Pin spacing 5.08 mm; 3-pole; 2,50 mm²; orange



Item no.: 231-303/026-000
1-conductor female connector; CAGE CLAMP®; 2.5 mm²; Pin spacing 5.08 mm; 3-pole; 2,50 mm²; orange



Item no.: 231-303/031-000
1-conductor female connector; CAGE CLAMP®; 2.5 mm²; Pin spacing 5.08 mm; 3-pole; clamping collar; 2,50 mm²; orange



Item no.: 231-303/037-000
1-conductor female connector; CAGE CLAMP®; 2.5 mm²; Pin spacing 5.08 mm; 3-pole; Lateral locking levers; 2,50 mm²; orange



Item no.: 231-303/102-000
1-conductor female connector; CAGE CLAMP®; 2.5 mm²; Pin spacing 5.08 mm; 3-pole; with integrated end plate; 2,50 mm²; orange



Item no.: 2231-303/026-000
1-conductor female connector; push-button; Push-in CAGE CLAMP®; 2.5 mm²; Pin spacing 5.08 mm; 3-pole; 2,50 mm²; orange



Item no.: 2231-303/031-000
1-conductor female connector; push-button; Push-in CAGE CLAMP®; 2.5 mm²; Pin spacing 5.08 mm; 3-pole; clamping collar; 2,50 mm²; orange

### 1.1.1 Female connector/socket



Item no.: 2231-303/037-000
1-conductor female connector; push-button; Push-in CAGE CLAMP®; 2.5 mm²; Pin spacing 5.08 mm; 3-pole; Lateral locking levers; 2,50 mm²; orange



Item no.: 2231-303/102-000
1-conductor female connector; push-button; Push-in CAGE CLAMP®; 2.5 mm²; Pin spacing 5.08 mm; 3-pole; with integrated end plate; 2,50 mm²; orange



Item no.: 231-2303/037-000
2-conductor female connector; Push-in CAGE CLAMP®; 2.5 mm²; Pin spacing 5.08 mm; 3-pole; Lateral locking levers; 2,50 mm²; orange



Item no.: 231-2303/026-000
2-conductor female connector; Push-in CAGE CLAMP®; 2.5 mm²; Pin spacing 5.08 mm; 3-pole; with integrated end plate; 2,50 mm²; orange

## 1.2 Optional accessories

### 1.2.1 Coding

#### 1.2.1.1 Coding



Item no.: 231-129
Coding key; snap-on type; light gray

#### 1.2.1.2 Intermediate plate



Item no.: 231-500
Spacer; for formation of groups; light gray

## Installation notes

### Coding

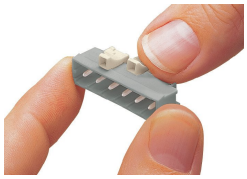

Coding a male header – fitting coding key (s).