Data Sheet | Item Number: 2201-1404

4-conductor through terminal block; with push-button; 1.5 mm²; with test port; suitable for Ex i applications; side and center marking; for DIN-rail 35 x 15 and 35 x 7.5; Push-in CAGE CLAMP®; 1,50 mm²; blue

https://www.wago.com/2201-1404

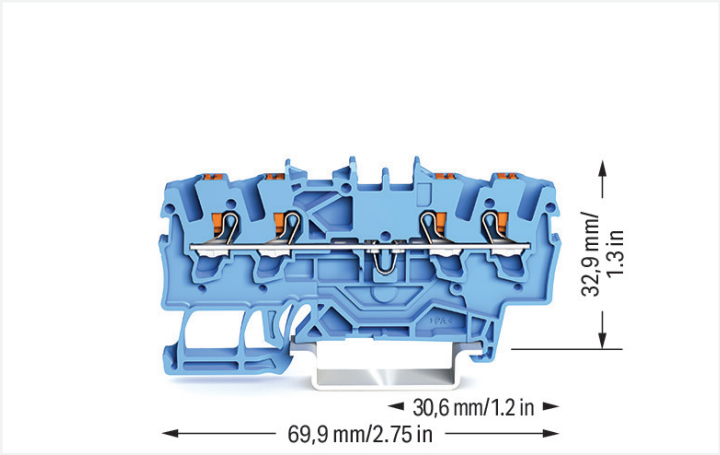

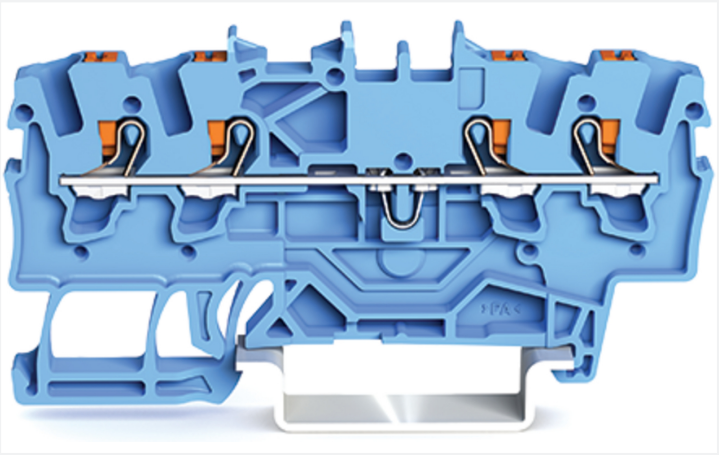

Color: blue

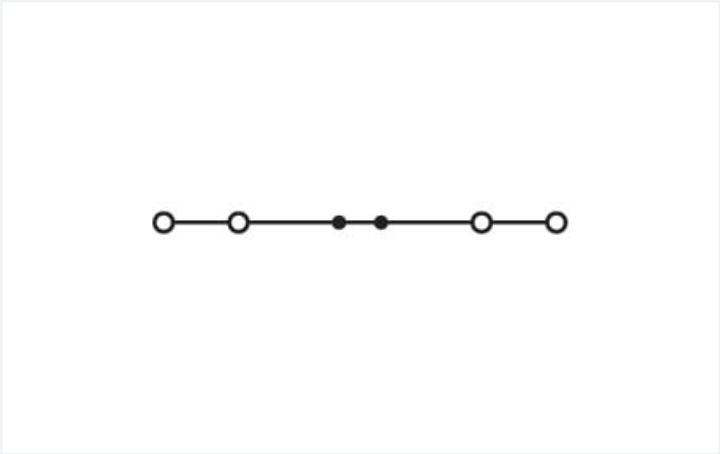

Similar to illustration

Through terminal block, 2201 Series, Push-in CAGE CLAMP®

Quick and easy connections are guaranteed with this through terminal block (item number 2201-1404). Whether for industrial or building applications, you can use our through terminal blocks to connect electrical conductors quickly and safely. We offer variants for both classic through-wiring and potential distribution. Rated current and voltage are important parameters when selecting a through rail-mount terminal block, as they indicate how the product can be used. This product has a rated voltage of 800 V and a rated current of 17.5 A. Ensure that the strip lengths are between 9 mm and 11 mm when connecting conductors to this through terminal block. This product features conductor terminals and utilizes Push-in CAGE CLAMP®. Push-in CAGE CLAMP® technology provides a universal connection solution for any type of conductor. It allows both solid and fine-stranded conductors with ferrules to be inserted directly into the clamping point without the need for tools. The item's dimensions are 4.2 x 69.9 x 39.5 mm (width x height x depth). This through terminal block is suitable for conductor cross sections ranging from 0.25 mm² to 2.5 mm². It features one level and four clamping points that you can use to connect a single potential. The blue housing is made of polyamide (PA66) for insulation. This through rail-mount terminal block is operated with a push-button. Our TOPJOB® S rail-mount terminal blocks guarantee secure electrical connections across many different industrial applications and modern building installations. They simplify wiring, as you can quickly plug in solid, stranded, and fine-stranded conductors with ferrules. These through rail-mount terminal blocks are mounted using DIN-35 rails.. You can connect copper conductors thanks to front-entry wiring. The two jumper slots enable potential distribution to other clamping points. This product is designed for specific Ex applications (please refer to the product datasheet).

Electrical data

Ratings per	IEC/EN 60947-7-1		
Overvoltage category	III	III	II
Pollution degree	3	2	2
Nominal voltage	800 V	-	-
Rated surge voltage	8 kV	-	-
Rated current	17.5 A	-	-
Current at conductor cross-section (max.) mm²	24 A	-	-

Approvals per	UL 1059		
Use group	B	C	D
Rated voltage	600 V	600 V	-
Rated current	15 A	15 A	-

Approvals per	CSA 22.2 No 158		
Use group	B	C	D
Rated voltage	600 V	600 V	-
Rated current	15 A	15 A	-

Ex information	
Reference hazardous areas	See “Downloads – Documentation – Additional Information: Technical Section; Technical Explications”
Ratings per	ATEX: PTB 18 ATEX 1004 U / IECEx: PTB 18.0011U (Ex eb IIC Gb)
Rated voltage EN (Ex e II)	550 V
Rated current (Ex e II)	17.5 A

Power Loss	
Power loss, per pole (potential)	0.7711 W
Rated current I_N for specified power loss	18 A
Resistance value for specified, current-dependent power loss	0.00238 Ω

Connection data

Clamping units	4
Total number of potentials	1
Number of levels	1
Number of jumper slots	2

Connection 1	
Connection technology	Push-in CAGE CLAMP®
Actuation type	Push-button
Connectable conductor materials	Copper
Nominal cross-section	1.5 mm²
Solid conductor	0.25 … 2.5 mm² / 22 … 14 AWG
Solid conductor; push-in termination	0.75 … 2.5 mm² / 18 … 14 AWG
Fine-stranded conductor	0.25 … 2.5 mm² / 22 … 14 AWG
Fine-stranded conductor; with insulated ferrule	0.25 … 1.5 mm² / 22 … 16 AWG
Fine-stranded conductor; with ferrule; push-in termination	0.75 … 1.5 mm² / 18 … 16 AWG
Note (conductor cross-section)	Depending on the conductor characteristic, a conductor with a smaller cross-section can also be inserted via push-in termination.
Strip length	9 … 11 mm / 0.35 … 0.43 inches
Wiring direction	Front-entry wiring

 Continued on next page

Physical data

Width	4.2 mm / 0.165 inches
Height	69.9 mm / 2.752 inches
Depth from upper-edge of DIN-rail	32.9 mm / 1.295 inches
Depth	39.5 mm / 1.555 inches

Mechanical data

Mounting type	DIN-35 rail
Marking level	Center/side marking

Material data

Note (material data)	Information on material specifications can be found here
Color	blue
Material group	I
Insulation material (main housing)	Polyamide (PA66)
Flammability class per UL94	V0
Fire load	0.156 MJ
Actuator color	orange
Weight	6 g

Environmental requirements

Processing temperature	-35 … +85 °C
Continuous operating temperature	-60 … +105 °C

Environmental Testing (Environmental Conditions)

Test specification Railway applications – Rolling stock – Electronic equipment	DIN EN 50155 (VDE 0115-200):2022-06
Test procedure Railway applications – Rolling stock equipment – Shock and vibration tests	DIN EN 61373 (VDE 0115-0106):2011-04
Spectrum/Installation location	Service life test, Category 1, Class A/B
Function test with noise-like vibration	Test passed according to Section 8 of the standard
Frequency	f_1 = 5 Hz to f_2 = 150 Hz f_1 = 5 Hz to f_2 = 150 Hz
Acceleration	0.101g (highest test level used for all axes) 0.572g (highest test level used for all axes) 5g (highest test level used for all axes)
Test duration per axis	10 min. 5 h
Test directions	X, Y and Z axes X, Y and Z axes X, Y and Z axes
Monitoring for contact faults/interruptions	Passed
Voltage drop measurement before and after each axis	Passed
Simulated service life test through increased levels of noise-like vibration	Test passed according to Section 9 of the standard
Extended test scope: Monitoring for contact faults/interruptions	Passed Passed
Extended test scope: Voltage drop measurement before and after each axis	Passed Passed
Shock test	Test passed according to Section 10 of the standard
Shock form	Half sine
Shock duration	30 ms

 Continued on next page

Environmental Testing (Environmental Conditions)

Number of shocks per axis	3 pos. und 3 neg.
Vibration and shock stress for rolling stock equipment	Passed

Commercial data

eCl@ss 10.0	27-14-11-20
eCl@ss 9.0	27-14-11-20
ETIM 9.0	EC000897
ETIM 8.0	EC000897
PU (SPU)	100 pcs
Packaging type	Box
Country of origin	DE
GTIN	4055143696876
Customs tariff number	85369010000

Environmental Product Compliance

RoHS Compliance Status	Compliant,No Exemption

Approvals / Certificates

General approvals

Approval	Standard	Certificate Name
CCA DEKRA Certification B.V.	EN 60947	NTR NL 7825
CSA DEKRA Certification B.V.	C22.2	70173738
cURus Underwriters Laboratories Inc.	UL 1059	E45172
KEMA/KEUR DEKRA Certification B.V.	EN 60947	71-113099

Declarations of conformity and manufacturer's declarations

Approval	Standard	Certificate Name
ATEX-Attestation of Conformity WAGO GmbH & Co. KG	-	-
EU-Declaration of Conformity WAGO GmbH & Co. KG	-	-
Railway WAGO GmbH & Co. KG	-	Z00004403.000
UK-Declaration of Conformity WAGO GmbH & Co. KG	-	-

Approvals for marine applications

Approval	Standard	Certificate Name
ABS American Bureau of Shipping	-	19-HG1866350-PDA
BV Bureau Veritas S.A.	IEC 60947	58186/A0 BV
DNV GL Det Norske Veritas, Germanischer Lloyd	-	TAE00003JT
LR Lloyds Register	-	19/20050

Approvals for hazardous areas

Approval	Standard	Certificate Name
AEx UL International Germany GmbH c/o Physikalisch Technische Bundesanstalt	UL 60079	E185892 (AEx eb IIC resp. Ex eb IIC)
ATEX Physikalisch Technische Bundesanstalt	IEC 60079-0	PTB 18 ATEX 1004 U (II 2 G Ex eb IIC Gb bzw. I M 2 Ex eb I Mb)
CCCEx CQST/CNEx	GB/T 3836.3	2020312313000167 (Ex eb IIC Gb, Ex eb I Mb)
EAC Brjansker Zertifizierungsstelle	TP TC 012/2011	RU C-DE.AM02.B.00127/19 (Ex e IIC Gb U)
IECEx Physikalisch Technische Bundesanstalt	IEC 60079-0	IECEx PTB 18.0011U (Ex eb IIC Gb and Ex eb I Mb)

Continued on next page

Approvals for hazardous areas

INMETRO TÜV Rheinland do Brasil Ltda.	IEC 60079	TÜV 19.0083 U

Downloads

Environmental Product Compliance

Compliance Search

Environmental Product Compliance 2201-1404

Documentation

Additional Information

Technical Section	pdf 2246.92 KB	

Bid Text

2201-1404	19.02.2019	xml 3.80 KB
2201-1404	09.08.2018	docx 14.88 KB

CAD/CAE-Data

CAD data

2D/3D Models 2201-1404

CAE data

EPLAN Data Portal 2201-1404

ZUKEN Portal 2201-1404

1 Compatible Products

1.1 Required Accessories

1.1.1 End plate

1.1.1.1 End plate



Item No.: 2002-1491
End and intermediate plate; 0.8 mm thick; gray



Item No.: 2002-1492
End and intermediate plate; 0.8 mm thick; orange



Item No.: 209-191
Separator for Ex e/Ex i applications; 3 mm thick; 120 mm wide; orange

 Continued on next page

1.2 Optional Accessories

1.2.1 DIN-rail

1.2.1.1 Mounting accessories



Item No.: 210-196
Aluminum carrier rail; 35 x 8.2 mm; 1.6 mm thick; 2 m long; unslotted; similar to EN 60715; silver-colored



Item No.: 210-198
Copper carrier rail; 35 x 15 mm; 2.3 mm thick; 2 m long; unslotted; according to EN 60715; copper-colored



Item No.: 210-197
Steel carrier rail; 35 x 15 mm; 1.5 mm thick; 2 m long; slotted; similar to EN 60715; silver-colored



Item No.: 210-114
Steel carrier rail; 35 x 15 mm; 1.5 mm thick; 2 m long; unslotted; similar to EN 60715; silver-colored



Item No.: 210-118
Steel carrier rail; 35 x 15 mm; 2.3 mm thick; 2 m long; unslotted; according to EN 60715; silver-colored



Item No.: 210-115
Steel carrier rail; 35 x 7.5 mm; 1 mm thick; 2 m long; slotted; according to EN 60715; "Hole width 18 mm; silver-colored



Item No.: 210-112
Steel carrier rail; 35 x 7.5 mm; 1 mm thick; 2 m long; slotted; according to EN 60715; "Hole width 25 mm; silver-colored



Item No.: 210-113
Steel carrier rail; 35 x 7.5 mm; 1 mm thick; 2 m long; unslotted; according to EN 60715; silver-colored

1.2.2 End plate

1.2.2.1 End plate



Item No.: 2002-1493
Seperator plate; 2 mm thick; oversized; gray



Item No.: 2002-1494
Seperator plate; 2 mm thick; oversized; orange

1.2.3 Ferrule

1.2.3.1 Ferrule

Item No.: 216-241
Ferrule; Sleeve for 0.5 mm² / 20 AWG; insulated; electro-tin plated; electrolytic copper; gastight crimped; acc. to DIN 46228, Part 4/09.90; white



Item No.: 216-242
Ferrule; Sleeve for 0.75 mm² / 18 AWG; insulated; electro-tin plated; electrolytic copper; gastight crimped; acc. to DIN 46228, Part 4/09.90; gray

Item No.: 216-243
Ferrule; Sleeve for 1 mm² / AWG 18; insulated; electro-tin plated; electrolytic copper; gastight crimped; acc. to DIN 46228, Part 4/09.90; red



Item No.: 216-244
Ferrule; Sleeve for 1.5 mm² / AWG 16; insulated; electro-tin plated; electrolytic copper; gastight crimped; acc. to DIN 46228, Part 4/09.90; black

1.2.4 Installation

1.2.4.1 Cover

Item No.: 709-156
Cover; Type 3; suitable for cover carrier, type 3; 1 m long; transparent

1.2.4.2 Cover carrier



Item No.: 709-169
Cover carrier; Type 3; incl. fixing/retaining screws and knurled nut; suitable for 279 to 282 and 880 Series rail-mounted terminal blocks; suitable for 264 Series miniature rail-mounted terminal blocks; suitable for 270 Series sensor and actuator terminal blocks; gray

 Continued on next page

1.2.5 Insulation stop

1.2.5.1 Insulation stop



Item No.: 2001-171
Insulation stop; 0.25 - 0.5 mm²; 5 pieces/ strip; light gray

1.2.6 Jumper

1.2.6.1 Jumper



Item No.: 2001-406/020-000
Delta jumper; insulated; light gray



Item No.: 2001-410
Jumper; 10-way; insulated; light gray



Item No.: 2001-402
Jumper; 2-way; insulated; light gray



Item No.: 2001-403
Jumper; 3-way; insulated; light gray



Item No.: 2001-404
Jumper; 4-way; insulated; light gray



Item No.: 2001-405
Jumper; 5-way; insulated; light gray



Item No.: 2001-406
Jumper; 6-way; insulated; light gray



Item No.: 2001-407
Jumper; 7-way; insulated; light gray



Item No.: 2001-408
Jumper; 8-way; insulated; light gray

Item No.: 2001-409
Jumper; 9-way; insulated; light gray



Item No.: 2001-440
Jumper; from 1 to 10; insulated; light gray



Item No.: 2001-433
Jumper; from 1 to 3; insulated; light gray



Item No.: 2001-434
Jumper; from 1 to 4; insulated; light gray



Item No.: 2001-435
Jumper; from 1 to 5; insulated; light gray



Item No.: 2001-436
Jumper; from 1 to 6; insulated; light gray



Item No.: 2001-437
Jumper; from 1 to 7; insulated; light gray



Item No.: 2001-438
Jumper; from 1 to 8; insulated; light gray



Item No.: 2001-439
Jumper; from 1 to 9; insulated; light gray



Item No.: 2001-405/011-000
Star point jumper; 3-way; insulated; light gray



Item No.: 2006-499
Step-down jumper; from 2006/2004 to 2004/2002/2001 series; from 2206/2204 to 2204/2202/2201 series; insulated; light gray



Item No.: 210-103
Wire commoning chain; insulated; black



Item No.: 210-123
Wire commoning chain; insulated; blue

1.2.7 Marking

1.2.7.1 Marker



Item No.: 793-4501/000-006
WMB marking card; as card; stretchable 4 - 4.2 mm; plain; snap-on type; blue



Item No.: 793-4501/000-007
WMB marking card; as card; stretchable 4 - 4.2 mm; plain; snap-on type; gray



Item No.: 793-4501/000-023
WMB marking card; as card; stretchable 4 - 4.2 mm; plain; snap-on type; green



Item No.: 793-4501/000-017
WMB marking card; as card; stretchable 4 - 4.2 mm; plain; snap-on type; light green



Item No.: 793-4501/000-012
WMB marking card; as card; stretchable 4 - 4.2 mm; plain; snap-on type; orange



Item No.: 793-4501/000-005
WMB marking card; as card; stretchable 4 - 4.2 mm; plain; snap-on type; red



Item No.: 793-4501/000-024
WMB marking card; as card; stretchable 4 - 4.2 mm; plain; snap-on type; violet

Item No.: 793-4501
WMB marking card; as card; stretchable 4 - 4.2 mm; plain; snap-on type; white



Item No.: 793-4501/000-002
WMB marking card; as card; stretchable 4 - 4.2 mm; plain; snap-on type; yellow



Item No.: 2009-114/000-006
WMB-Inline; for Smart Printer; 2000 pieces on roll; stretchable 4 - 4.2 mm; plain; snap-on type; blue



Item No.: 2009-114/000-007
WMB-Inline; for Smart Printer; 2000 pieces on roll; stretchable 4 - 4.2 mm; plain; snap-on type; gray



Item No.: 2009-114/000-023
WMB-Inline; for Smart Printer; 2000 pieces on roll; stretchable 4 - 4.2 mm; plain; snap-on type; green

Continued on next page

1.2.7.1 Marker



Item No.: 2009-114/000-012
WMB-Inline; for Smart Printer; 2000 pieces on roll; stretchable 4 - 4.2 mm; plain; snap-on type; orange



Item No.: 2009-114/000-005
WMB-Inline; for Smart Printer; 2000 pieces on roll; stretchable 4 - 4.2 mm; plain; snap-on type; red



Item No.: 2009-114/000-024
WMB-Inline; for Smart Printer; 2000 pieces on roll; stretchable 4 - 4.2 mm; plain; snap-on type; violet



Item No.: 2009-114
WMB-Inline; for Smart Printer; 2000 pieces on roll; stretchable 4 - 4.2 mm; plain; snap-on type; white



Item No.: 2009-114/000-002
WMB-Inline; for Smart Printer; 2000 pieces on roll; stretchable 4 - 4.2 mm; plain; snap-on type; yellow

1.2.7.2 Marking strip



Item No.: 2009-110
Marking strips; for Smart Printer; on reel; not stretchable; plain; snap-on type; white

1.2.8 Push-in type wire jumper

1.2.8.1 Jumper



Item No.: 2009-414
Push-in type wire jumper; 1.5 mm²; insulated; 110 mm long; black



Item No.: 2009-414/000-005
Push-in type wire jumper; 1.5 mm²; insulated; 110 mm long; black



Item No.: 2009-416
Push-in type wire jumper; 1.5 mm²; insulated; 250 mm long; black



Item No.: 2009-414/000-006
Push-in type wire jumper; insulated; 110 mm long; black



Item No.: 2009-412
Push-in type wire jumper; insulated; 60 mm long; black

1.2.9 Screwless end stop

1.2.9.1 Mounting accessories



Item No.: 249-117
Screwless end stop; 10 mm wide; for DIN-rail 35 x 15 and 35 x 7.5; gray



Item No.: 249-116
Screwless end stop; 6 mm wide; for DIN-rail 35 x 15 and 35 x 7.5; gray

1.2.10 Test and measurement

1.2.10.1 Testing accessories



Item No.: 2001-560
Modular TOPJOB®S connector; modular; for jumper contact slot; 10-pole; 1,50 mm²; gray



Item No.: 2001-511
Modular TOPJOB®S connector; modular; for jumper contact slot; 1-pole; 1,50 mm²; gray



Item No.: 2001-552
Modular TOPJOB®S connector; modular; for jumper contact slot; 2-pole; 1,50 mm²; gray



Item No.: 2001-553
Modular TOPJOB®S connector; modular; for jumper contact slot; 3-pole; 1,50 mm²; gray



Item No.: 2001-554
Modular TOPJOB®S connector; modular; for jumper contact slot; 4-pole; 1,50 mm²; gray



Item No.: 2001-555
Modular TOPJOB®S connector; modular; for jumper contact slot; 5-pole; 1,50 mm²; gray



Item No.: 2001-556
Modular TOPJOB®S connector; modular; for jumper contact slot; 6-pole; 1,50 mm²; gray



Item No.: 2001-557
Modular TOPJOB®S connector; modular; for jumper contact slot; 7-pole; 1,50 mm²; gray

Continued on next page

1.2.10.1 Testing accessories



Item No.: 2001-558
Modular TOPJOB®S connector; modular; for jumper contact slot; 8-pole; 1,50 mm²; gray



Item No.: 2001-559
Modular TOPJOB®S connector; modular; for jumper contact slot; 9-pole; 1,50 mm²; gray



Item No.: 2001-549
Spacer module; modular; e.g., for bridging commoned terminal blocks; gray

Item No.: 2009-174
Test plug adapter; for 4 mm Ø test plugs; for testing TOPJOB®S rail-mounted terminal blocks; gray



Item No.: 210-136
Test plug; 2 mm Ø; with 500 mm cable; red



Item No.: 2009-182
Testing tap; for max. 2.5 mm²; tool-free connection for individual test wires 0.08 - 2.5 mm; gray

1.2.11 Tool

1.2.11.1 Operating tool



Item No.: 210-719
Operating tool; Blade: 2.5 x 0.4 mm; with a partially insulated shaft



Item No.: 210-648
Operating tool; Blade: 2.5 x 0.4 mm; with a partially insulated shaft; angled; short



Item No.: 210-647
Operating tool; Blade: 2.5 x 0.4 mm; with a partially insulated shaft; multicoloured

Installation Notes

Conductor termination



All conductor types at a glance



Push-in termination of solid and ferruled conductors



Insert fine-stranded conductors via operating tool.



Removing all conductors via operating tool.

Commoning

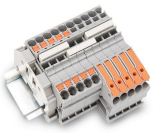

Insert a push-in type jumper bar and push down until it hits the backstop.



Commoning with step-down jumpers.



Step-down jumper (2006-499) commons 6/4 mm² (10/12 AWG) terminal blocks (2206/2204 Series) with 4/2.5/1.5 mm² (AWG 12/14/16) terminal blocks (2204/2202/2201 Series).

Testing



Testing with a 2 mm Ø test plug (max. 42 V).

Continued on next page

Marking

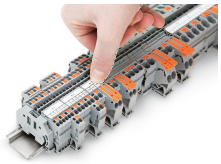

Snapping a marking strip into a marker slot.

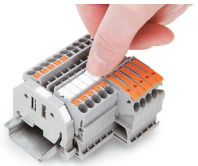

Snapping a marking strip into the marker slot.