

Pin Assignment:

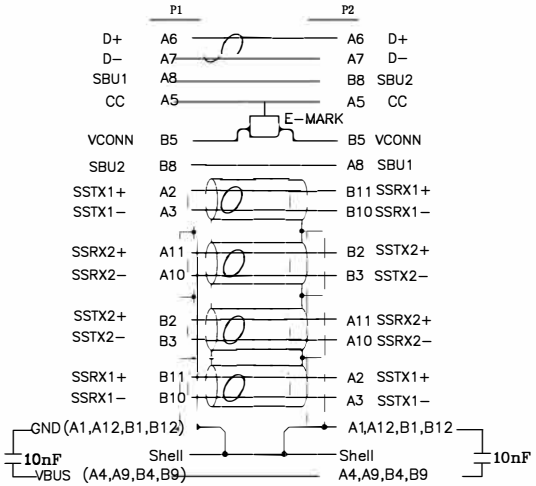

NO.	DESCRIPTION	Q'TY	UNIT
5	USB4 SHELL~PC+ABS~BLACK	2	PCS
4	PVC~BLACK	10	G
3	USB4~CONNECTOR~WITH IC~NI PLATED	1	PCS
2	USB4~CONNECTOR~WITHOUT IC~NI PLATED	1	PCS
1	31AWG*4P+32AWG*1P+34AWG*4C+23AWG*1C+A2EB(80%TC)~OD:4.9MM~BLACK~PVC	1.0	m

Rev.	ECN NO.	Description	Date	Name

TOLERANCE	INCHES	M/M
.X	.015	.30
.XX	.010	.10
.XXX	.005	.05

Title: 1m USB4 20Gbps EPR(240W) Cable,twisted pair cable, Black ABS hood

DRAWN BY		CUSTOMER:	
CHECK BY		CUSTOMER P/N:	
APPD BY		SCALE: NONE	DRAWING NO.: PSG92069
		UNIT: MM	Rev. A0
		DATE: 2023.11.15	1/1