8 Way Angleable 90° Category 6A Toolless Plug

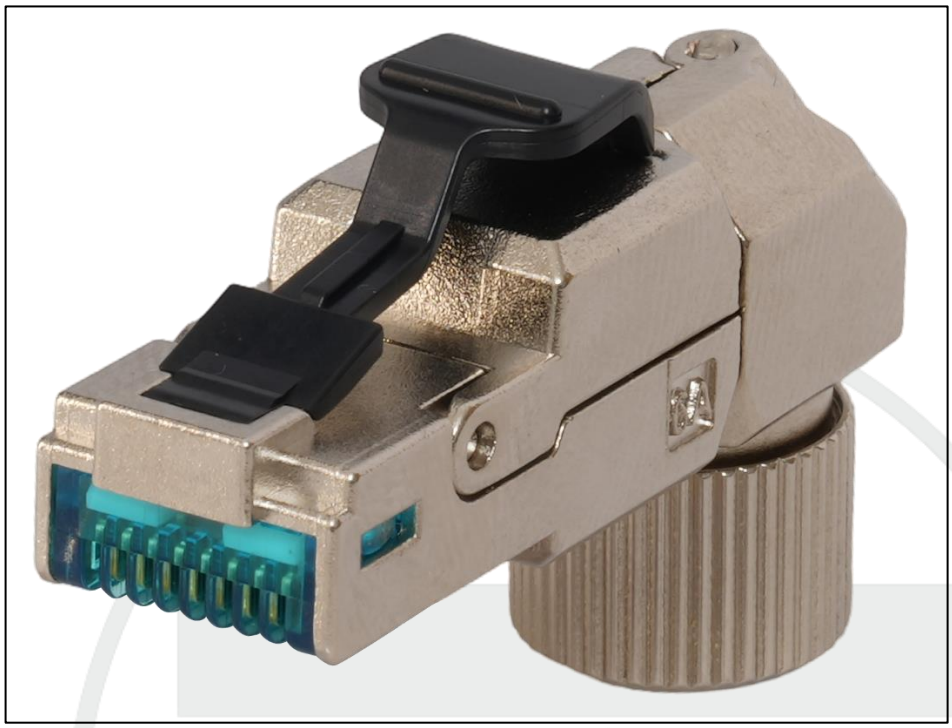

8 Way Angleable 90° Category 6A Toolless Plug (PGS45)

This fully shielded 90 degree Category 6A plug with zinc alloy housing offers 8 way entry design with quick, easy and reliable termination.

Features:

- Flexible cable entry design offers assembly in any one of eight directions
- Capable of multiple adjustment/re-termination if necessary
- High performance data throughput, meets Category 6A data transfer rates (so also suitable for Cat 5 and Cat 6)
- Fully shielded
- Colour coded to enable T568A, T568B or Industrial (eg Profinet) wiring
- Suitable for cable O.D: 5.5~8.5mm
- Suitable for UTP 23~27 AWG / 0.40 – 0.57 mm stranded or solid cores (10 installation cycles with 23-26AWG; 5 installation cycles with 27AWG)
- Mating cycles: 750 minimum
- Suitable for assembly of angled patchleads
- Easy assembly – suitable for field termination, especially MPTL installations
- 4PPoE compliant

Specifications:

- Net weight 16g (including primary packaging):
- Dimensions: 120x90x15mm (in primary packaging)
- Colour: Silver and Black
- Materials: Contact: Phosphor bronze, 50u" Gold plating
  Housing: Zinc-alloy, Nickel Plated
  IDC Terminals: Phosphor Bronze, Tin Plated
  IDC Housing cover: Polycarbonate

Packaging: Packed in individual poly bags then in bags of 10

TUK Ltd, Unit 4, Wimbledon Stadium Business Centre, Riverside Road, London SW17 0BA

Tel: 020 8946 6688 Email: sales@tuk.co.uk Website: www.tuk.co.uk

EAN: 5055386513472

Commodity Code: 8544411000

Country of Origin: China

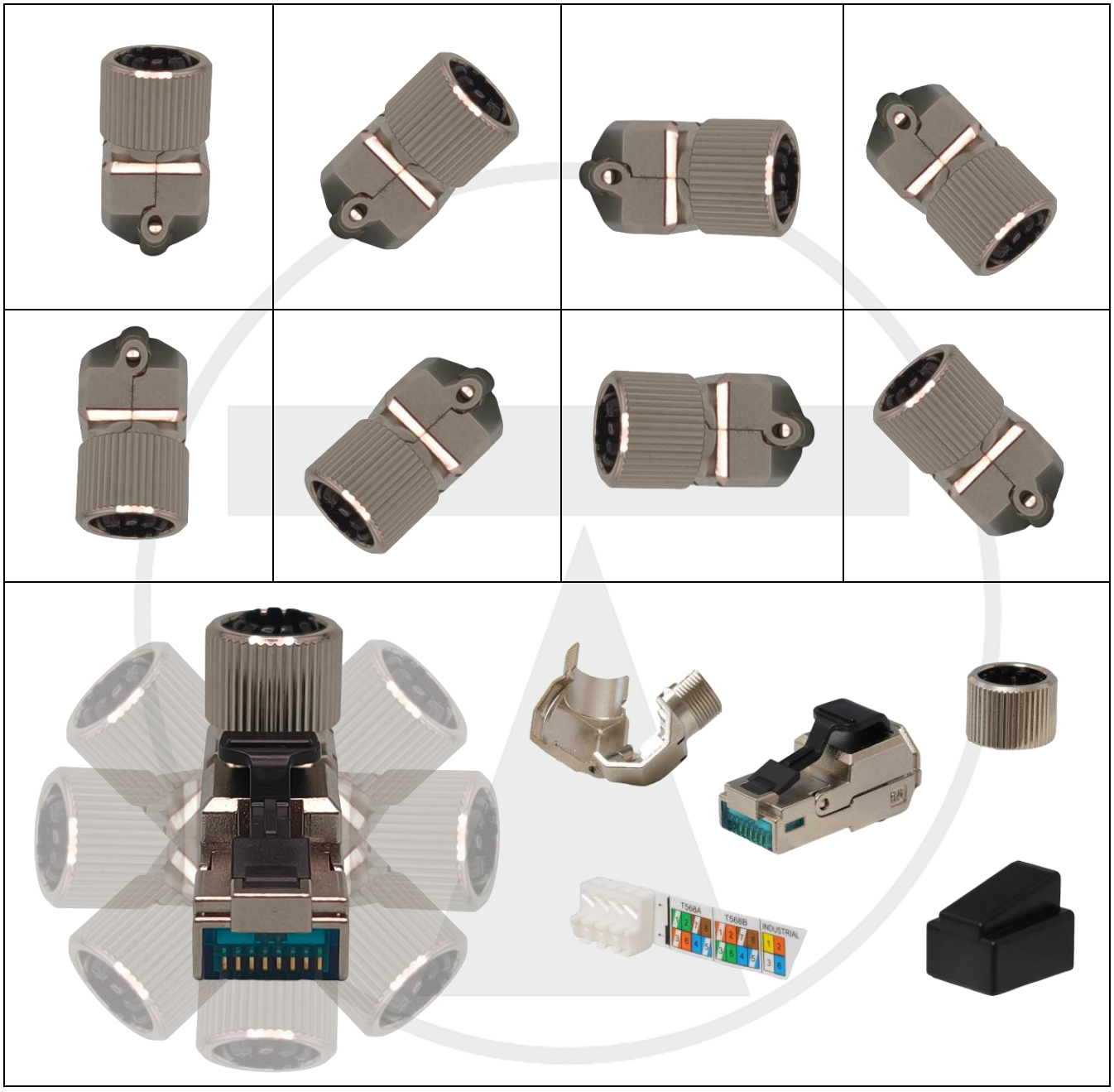

Illustration of cable entry angles possible with PGS45

TUK

ROHS Compliant

Code: PGS45

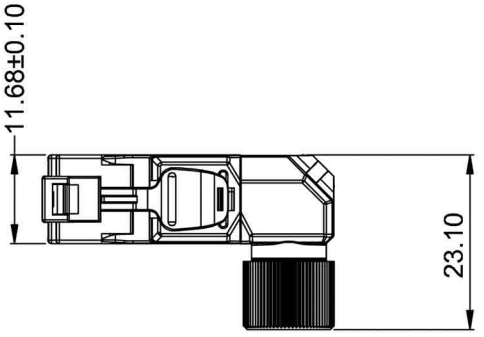

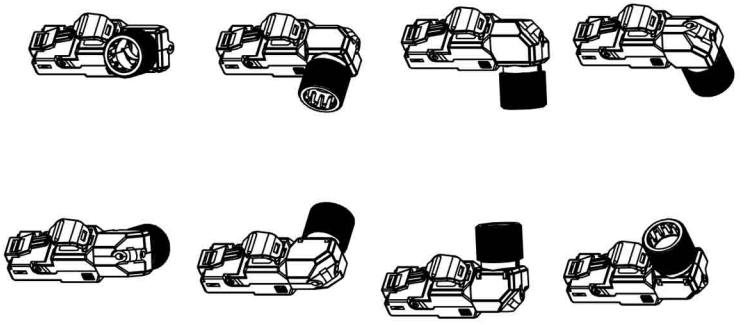

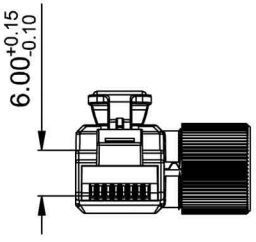

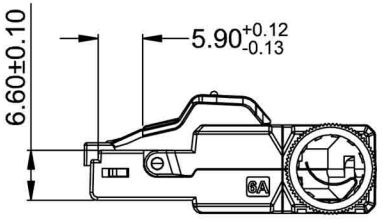

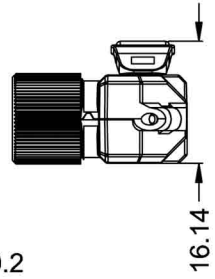

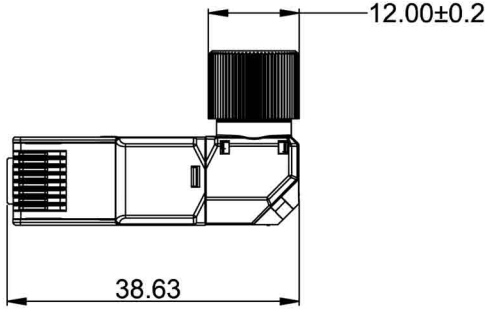

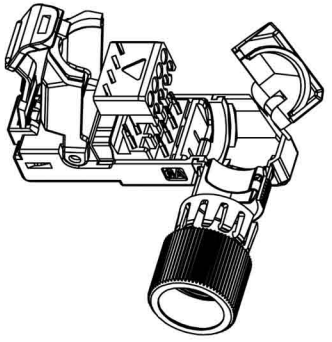

ELECTRICAL:
- Current rating : 1.5A
- Dielectric withstanding voltage : 1000V/AC 60Hz
- Insulation resistance : 500 MΩ MIN.
- Contact resistanc[illegible] POM/acetal

MECHANICAL:
- Durability:750 Mechanical Cycles
- Wiring Properties: UTP 23~27 AWG
- Supporting Cable Diameter: 5.5~8.5mm
- Operating Temperature:-10°C to +60°C
- Storage Temperature:-40°C to +70°C

Re-Termination capability:
- AWG 23/1~26/1, AWG 23/7~26/7: 10 times
- AWG 27/7: 5 times

MATERIAL
- RJ45 Plug Contact:Phosphor bronze,50u" Gold plating
- RJ45 Plug Latch: POM/acetal
- RJ45 Plug Housing: Zinc-alloy ,Nickel Plated
- IDC Housing cover: PC
- IDC Terminals: Phosphor Bronze,Tin Plated
- Corner Joint: Zinc-alloy ,Nickel Plated
- C-ring: POM/acetal
- Nut: Free cutting steel,Nickel Plated

TUK Ltd, Unit 4, Wimbledon Stadium Business Centre, Riverside Road, London, SW17 0BA

19/08/2025

Tel: 020 8946 6688 Fax: 020 8879 7410 Email: sales@tuk.co.uk Website: www.tuk.co.uk

Instruction Manual

①

Insert cable through cable gland.
Strip off cable jacket as shown,
fold back the drain wire/braiding.
Fan out all four twisted pairs,
cut the conductors as shown.

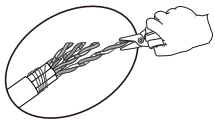

JACK PIN DESIGNATIONS		TIA / EIA T568A	TIA / EIA T568B	INDUSTRIAL
	1	White/Green	White/Orange	Yellow
	2	Green	Orange	Orange
	3	White/Orange	White/Green	White
	6	Orange	Green	Blue
	4	Blue	Blue	
	5	White/Blue	White/Blue	
	7	White/Brown	White/Brown	
	8	Brown	Brown	

Note:

a. Cable Bushing is placed inside the Cable Gland at factory, in case the Cable Bushing is pushed out while inserting bigger OD cable/ or cable with jaggy surface through the cable gland, place back the Bushing as direction shown and continue installation.

b. Cable Bushing may be removed if using Cable OD over 8mm.

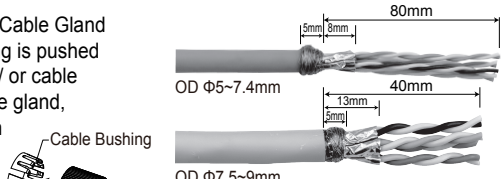

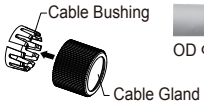

②

Following the colour coding label and allocate each conductor into proper slot on wiring cap. Trim the ends of excess conductors.

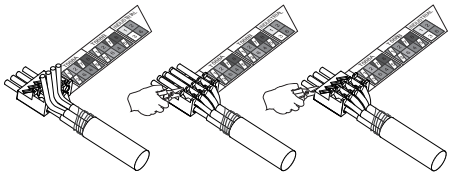

③

Remove the wiring label before place wiring cap on plug.

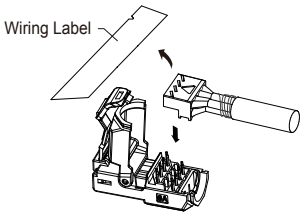

④

Place the wiring cap onto plug, use plier to clamp wiring cap until it completely snap-in to effect the connection.

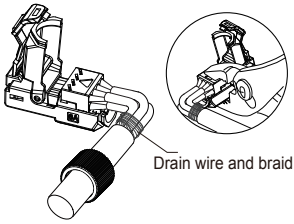

PGS45

Instruction Manual

⑤

Close plug cover, make sure the drain wire is in proper contact with earthing clip on plug. Select the desired cable exit, bend the stripped cores and allocate the Angle Clamp on plug to create the cable exit direction, close the angle clamp and screw on the cable gland to complete the installation.

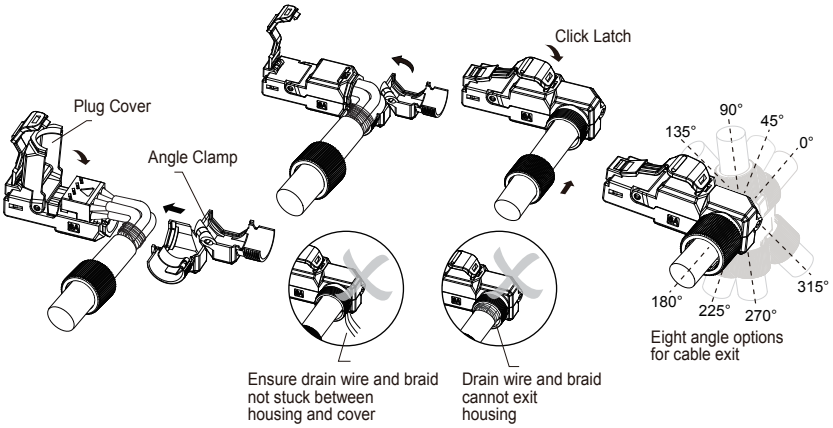

Unload the cable

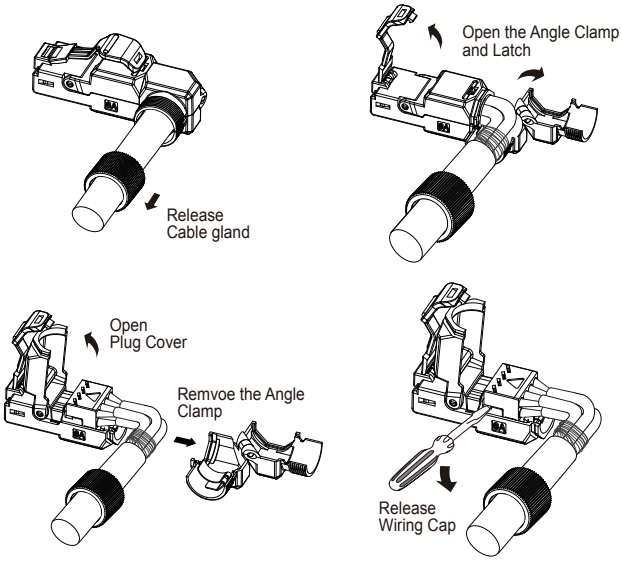

PGS45