Data Sheet | Item Number: 2102-5304

3-conductor through terminal block; with lever and push-button; 2.5 mm²; with test port; suitable for Ex i applications; side and center marking; for DIN-rail 35 x 15 and 35 x 7.5; Push-in CAGE CLAMP®; 2,50 mm²; blue

https://www.wago.com/2102-5304

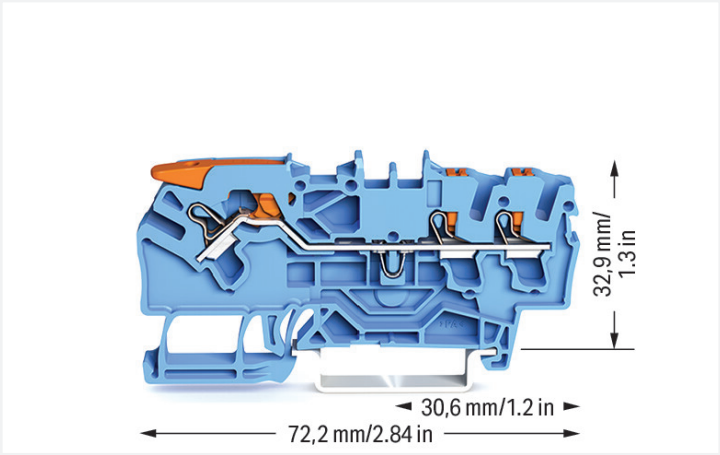

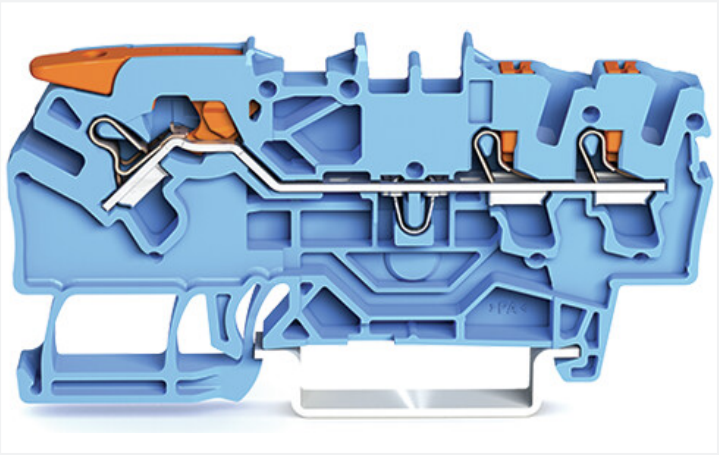

Color: blue

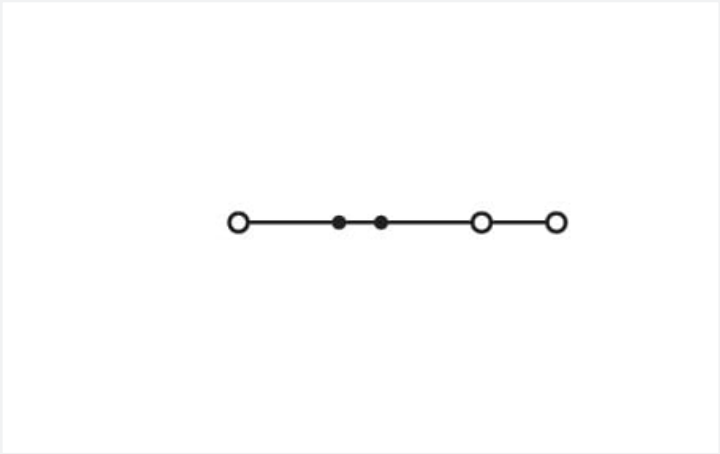

Similar to illustration

Electrical data

Ratings per	IEC/EN 60947-7-1		
Overvoltage category	III	III	II
Pollution degree	3	2	2
Nominal voltage	800 V	-	-
Rated surge voltage	8 kV	-	-
Rated current	24 A	-	-
Current at conductor cross-section (max.) mm²	30 A	-	-

Approvals per	UL 1059		
Use group	B	C	D
Rated voltage	600 V	600 V	-
Rated current	20 A	20 A	-

Approvals per	CSA 22.2 No 158		
Use group	B	C	D
Rated voltage	600 V	600 V	-
Rated current	20 A	20 A	-

Ex information	
Reference hazardous areas	See “Downloads – Documentation – Additional Information: Technical Section; Technical Explications”
Ratings per	ATEX: PTB 18 ATEX 1010 U / IECEx: PTB 18.0001U (Ex eb IIC Gb)
Rated voltage EN (Ex e II)	550 V
Rated current (Ex e II)	20.5 A
Rated current (Ex e II) with jumper	20 A

Continued on next page

Power Loss

Power loss, per pole (potential)	0.7661 W
Rated current I_N for specified power loss	24 A
Resistance value for specified, current-dependent power loss	0.00133 Ω

Connection data

Connection points	3
Total number of potentials	1
Number of levels	1
Number of jumper slots	2

Connection 1

Connection technology	Push-in CAGE CLAMP®
Actuation type	Lever
Connectable conductor materials	Copper
Nominal cross-section	2.5 mm²
Solid conductor	0.25 … 4 mm² / 22 … 12 AWG
Solid conductor; push-in termination	0.75 … 4 mm² / 18 … 12 AWG
Fine-stranded conductor	0.25 … 4 mm² / 22 … 12 AWG
Fine-stranded conductor; with insulated ferrule	0.25 … 2.5 mm² / 22 … 14 AWG
Fine-stranded conductor; with ferrule; push-in termination	1 … 2.5 mm² / 18 … 14 AWG
Note (conductor cross-section)	Depending on the conductor characteristic, a conductor with a smaller cross-section can also be inserted via push-in termination.
Strip length	10 … 12 mm / 0.39 … 0.47 inches
Wiring direction	Front-entry wiring

Connection 2

Actuation type 2	Push-button

Physical data

Width	5.2 mm / 0.205 inches
Height	72.2 mm / 2.843 inches
Depth from upper-edge of DIN-rail	32.9 mm / 1.295 inches

Mechanical data

Mounting type	DIN-35 rail
Marking level	Center/side marking

Material data

Note (material data)	Information on material specifications can be found here
Color	blue
Material group	I
Insulation material	Polyamide (PA66)
Flammability class per UL94	V0
Fire load	0.186 MJ
Actuator color	orange
Weight	8.1 g

Continued on next page

Environmental requirements

Processing temperature	-35 … +85 °C
Continuous operating temperature	-60 … +105 °C

Commercial data

eCl@ss 10.0	27-14-11-20
eCl@ss 9.0	27-14-11-20
ETIM 8.0	EC000897
ETIM 7.0	EC000897
PU (SPU)	50 pcs
Packaging type	Box
Country of origin	PL
GTIN	4055143741989
Customs tariff number	85369010000

Environmental Product Compliance

RoHS Compliance Status	Compliant,No Exemption

Approvals / Certificates

General approvals

Approval	Standard	Certificate Name
CCA DEKRA Certification B.V.	EN 60947	NTR NL 7670
CSA DEKRA Certification B.V.	C22.2	70175030
cURus Underwriters Laboratories Inc.	UL 1059	E45172
KEMA/KEUR DEKRA Certification B.V.	EN 60947	71-102882

Declarations of conformity and manufacturer's declarations

Approval	Standard	Certificate Name
ATEX-Attestation of Conformity WAGO GmbH & Co. KG	-	-
EU-Declaration of Conformity WAGO GmbH & Co. KG	-	-
UK-Declaration of Conformity WAGO GmbH & Co. KG	-	-

Approvals for marine applications

Approval	Standard	Certificate Name
ABS American Bureau of Shipping	-	9-HG1866350-PDA
BV Bureau Veritas S.A.	IEC 60947	58186/A0 BV
DNV GL Det Norske Veritas, Germanischer Lloyd	-	TAE00003JT
LR Lloyds Register	-	19/20050

Approvals for hazardous areas

Approval	Standard	Certificate Name
AEx Underwriters Laboratories Inc.	UL 60079	20181105-E185892 (AEx eb IIC resp. Ex eb IIC)
ATEX Physikalisch Technische Bundesanstalt	EN 60079-0	PTB 18 ATEX 1010 U (II 2 G Ex eb IIC Gb bzw. I M 2 Ex eb I Mb)
CCC CNEX	GB/T 3836.3	2020312313000163 (Ex eb IIC Gb, Ex eb I Mb)
EAC Brjansker Zertifizierungsstelle	TP TC 012/2011	RU C-DE.AM02.B.00127/19 (Ex e IIC Gb U)
IECEx Physikalisch Technische Bundesanstalt	IEC 60079-0	IECEx PTB 18.0017U (Ex eb IIC Gb resp. Ex eb I Mb)
INMETRO TÜV Rheinland do Brasil Ltda.	IEC 60079	TÜV 19.0818 U

Continued on next page

Downloads

Environmental Product Compliance

Compliance Search
Environmental Product Compliance 2102-5304

Documentation

Additional Information		
Technical Section	pdf 2142.18 KB	

Bid Text		
2102-5304	15.05.2019	xml 4.03 KB
2102-5304	14.05.2019	docx 14.64 KB

CAD/CAE-Data

CAD data
2D/3D Models 2102-5304

CAE data
EPLAN Data Portal 2102-5304
ZUKEN Portal 2102-5304

1 Compatible Products

1.1 Required Accessories

1.1.1 End plate

1.1.1.1 End plate



Item No.: 2102-1391
End and intermediate plate; 0.8 mm thick; for 3-conductor terminal blocks; gray



Item No.: 2102-1392
End and intermediate plate; 0.8 mm thick; for 3-conductor terminal blocks; orange

1.2 Optional Accessories

1.2.1 DIN-rail

 Continued on next page

1.2.1.1 Mounting accessories



Item No.: 210-196
Aluminum carrier rail; 35 x 8.2 mm; 1.6 mm thick; 2 m long; unslotted; similar to EN 60715; silver-colored



Item No.: 210-198
Copper carrier rail; 35 x 15 mm; 2.3 mm thick; 2 m long; unslotted; according to EN 60715; copper-colored



Item No.: 210-197
Steel carrier rail; 35 x 15 mm; 1.5 mm thick; 2 m long; slotted; similar to EN 60715; silver-colored



Item No.: 210-114
Steel carrier rail; 35 x 15 mm; 1.5 mm thick; 2 m long; unslotted; similar to EN 60715; silver-colored



Item No.: 210-118
Steel carrier rail; 35 x 15 mm; 2.3 mm thick; 2 m long; unslotted; according to EN 60715; silver-colored



Item No.: 210-115
Steel carrier rail; 35 x 7.5 mm; 1 mm thick; 2 m long; slotted; according to EN 60715; "Hole width 18 mm; silver-colored



Item No.: 210-112
Steel carrier rail; 35 x 7.5 mm; 1 mm thick; 2 m long; slotted; according to EN 60715; "Hole width 25 mm; silver-colored



Item No.: 210-113
Steel carrier rail; 35 x 7.5 mm; 1 mm thick; 2 m long; unslotted; according to EN 60715; silver-colored

1.2.2 Ferrule

1.2.2.1 Ferrule

Item No.: 216-241
Ferrule; Sleeve for 0.5 mm² / 20 AWG; insulated; electro-tin plated; electrolytic copper; gastight crimped; acc. to DIN 46228, Part 4/09.90; white



Item No.: 216-242
Ferrule; Sleeve for 0.75 mm² / 18 AWG; insulated; electro-tin plated; electrolytic copper; gastight crimped; acc. to DIN 46228, Part 4/09.90; gray

Item No.: 216-262
Ferrule; Sleeve for 0.75 mm² / 18 AWG; insulated; electro-tin plated; electrolytic copper; gastight crimped; acc. to DIN 46228, Part 4/09.90; gray



Item No.: 216-243
Ferrule; Sleeve for 1 mm² / AWG 18; insulated; electro-tin plated; electrolytic copper; gastight crimped; acc. to DIN 46228, Part 4/09.90; red

Item No.: 216-263
Ferrule; Sleeve for 1 mm² / AWG 18; insulated; electro-tin plated; electrolytic copper; gastight crimped; acc. to DIN 46228, Part 4/09.90; red



Item No.: 216-244
Ferrule; Sleeve for 1.5 mm² / AWG 16; insulated; electro-tin plated; electrolytic copper; gastight crimped; acc. to DIN 46228, Part 4/09.90; black



Item No.: 216-264
Ferrule; Sleeve for 1.5 mm² / AWG 16; insulated; electro-tin plated; electrolytic copper; gastight crimped; acc. to DIN 46228, Part 4/09.90; black



Item No.: 216-246
Ferrule; Sleeve for 2.5 mm² / AWG 14; insulated; electro-tin plated; electrolytic copper; gastight crimped; acc. to DIN 46228, Part 4/09.90; blue



Item No.: 216-266
Ferrule; Sleeve for 2.5 mm² / AWG 14; insulated; electro-tin plated; electrolytic copper; gastight crimped; acc. to DIN 46228, Part 4/09.90; blue

1.2.3 Installation

1.2.3.1 Cover

Item No.: 709-156
Cover; Type 3; suitable for cover carrier, type 3; 1 m long; transparent

1.2.3.2 Cover carrier



Item No.: 709-169
Cover carrier; Type 3; gray

1.2.4 Insulation stop

Continued on next page

1.2.4.1 Insulation stop



Item No.: 2002-171
Insulation stop; 0.25 - 0.5 mm²; 5 pieces/ strip; light gray



Item No.: 2002-172
Insulation stop; 0.75 - 1 mm²; 5 pieces/ strip; dark gray

1.2.5 Jumper

1.2.5.1 Jumper



Item No.: 2002-400
Continuous jumper; 2-way; insulated; light gray



Item No.: 2002-423/000-006
Continuous jumper; from 1 to 3; insulated; blue



Item No.: 2002-423
Continuous jumper; from 1 to 3; insulated; light gray



Item No.: 2002-423/000-005
Continuous jumper; from 1 to 3; insulated; red



Item No.: 2002-424/000-006
Continuous jumper; from 1 to 4; insulated; blue



Item No.: 2002-424
Continuous jumper; from 1 to 4; insulated; light gray



Item No.: 2002-424/000-005
Continuous jumper; from 1 to 4; insulated; red



Item No.: 2002-406/020-000
Delta jumper; insulated; light gray



Item No.: 2002-410/000-006
Jumper; 10-way; insulated; blue



Item No.: 2002-410
Jumper; 10-way; insulated; light gray



Item No.: 2002-410/000-005
Jumper; 10-way; insulated; red



Item No.: 2002-402/000-006
Jumper; 2-way; insulated; blue



Item No.: 2002-402
Jumper; 2-way; insulated; light gray



Item No.: 2002-402/000-005
Jumper; 2-way; insulated; red



Item No.: 2002-403/000-006
Jumper; 3-way; insulated; blue



Item No.: 2002-403
Jumper; 3-way; insulated; light gray



Item No.: 2002-403/000-005
Jumper; 3-way; insulated; red



Item No.: 2002-404/000-006
Jumper; 4-way; insulated; blue



Item No.: 2002-404
Jumper; 4-way; insulated; light gray



Item No.: 2002-404/000-005
Jumper; 4-way; insulated; red



Item No.: 2002-405/000-006
Jumper; 5-way; insulated; blue



Item No.: 2002-405
Jumper; 5-way; insulated; light gray



Item No.: 2002-405/000-005
Jumper; 5-way; insulated; red



Item No.: 2002-406/000-006
Jumper; 6-way; insulated; blue



Item No.: 2002-406
Jumper; 6-way; insulated; light gray



Item No.: 2002-406/000-005
Jumper; 6-way; insulated; red



Item No.: 2002-407/000-006
Jumper; 7-way; insulated; blue



Item No.: 2002-407
Jumper; 7-way; insulated; light gray



Item No.: 2002-407/000-005
Jumper; 7-way; insulated; red



Item No.: 2002-408/000-006
Jumper; 8-way; insulated; blue



Item No.: 2002-408
Jumper; 8-way; insulated; light gray



Item No.: 2002-408/000-005
Jumper; 8-way; insulated; red



Item No.: 2002-409/000-006
Jumper; 9-way; insulated; blue



Item No.: 2002-409
Jumper; 9-way; insulated; light gray



Item No.: 2002-409/000-005
Jumper; 9-way; insulated; red



Item No.: 2002-440
Jumper; from 1 to 10; insulated; light gray



Item No.: 2002-433
Jumper; from 1 to 3; insulated; light gray



Item No.: 2002-434
Jumper; from 1 to 4; insulated; light gray

Item No.: 2002-435
Jumper; from 1 to 5; insulated; light gray

Item No.: 2002-436
Jumper; from 1 to 6; insulated; light gray

Item No.: 2002-437
Jumper; from 1 to 7; insulated; light gray

Item No.: 2002-438
Jumper; from 1 to 8; insulated; light gray

Item No.: 2002-439
Jumper; from 1 to 9; insulated; light gray

Item No.: 2002-480
Staggered jumper; 10-way; insulated; light gray

Item No.: 2002-481
Staggered jumper; 11-way; insulated; light gray

Item No.: 2002-482
Staggered jumper; 12-way; insulated; light gray

Item No.: 2002-473/011-000
Staggered jumper; 2-way; from 1 to 3; insulated; light gray

Item No.: 2002-472
Staggered jumper; 2-way; insulated; light gray

Continued on next page

1.2.5.1 Jumper



Item No.: 2002-473
Staggered jumper; 3-way; insulated; light gray



Item No.: 2002-475/011-000
Staggered jumper; 3-way; insulated; light gray



Item No.: 2002-474
Staggered jumper; 4-way; insulated; light gray



Item No.: 2002-475
Staggered jumper; 5-way; insulated; light gray



Item No.: 2002-476
Staggered jumper; 6-way; insulated; light gray



Item No.: 2002-477
Staggered jumper; 7-way; insulated; light gray



Item No.: 2002-478
Staggered jumper; 8-way; insulated; light gray



Item No.: 2002-479
Staggered jumper; 9-way; insulated; light gray



Item No.: 2002-477/011-000
Staggered jumper; insulated; light gray



Item No.: 2002-479/011-000
Staggered jumper; insulated; light gray



Item No.: 2002-481/011-000
Staggered jumper; insulated; light gray



Item No.: 2002-405/011-000
Star point jumper; 3-way; insulated; light gray



Item No.: 210-103
Wire commoning chain; insulated; black



Item No.: 210-123
Wire commoning chain; insulated; blue

1.2.6 Marking

1.2.6.1 Group marker carrier



Item No.: 2009-191
Group marker carrier; gray



Item No.: 2009-192
Group marker carrier; gray



Item No.: 2009-193
Group marker carrier; gray

1.2.6.2 Marker



Item No.: 2009-145/000-006
Mini-WSB Inline; for Smart Printer; 1700 pieces on roll; stretchable 5 - 5.2 mm; plain; snap-on type; blue



Item No.: 2009-145/000-007
Mini-WSB Inline; for Smart Printer; 1700 pieces on roll; stretchable 5 - 5.2 mm; plain; snap-on type; gray



Item No.: 2009-145/000-023
Mini-WSB Inline; for Smart Printer; 1700 pieces on roll; stretchable 5 - 5.2 mm; plain; snap-on type; green



Item No.: 2009-145/000-012
Mini-WSB Inline; for Smart Printer; 1700 pieces on roll; stretchable 5 - 5.2 mm; plain; snap-on type; orange



Item No.: 2009-145/000-005
Mini-WSB Inline; for Smart Printer; 1700 pieces on roll; stretchable 5 - 5.2 mm; plain; snap-on type; red



Item No.: 2009-145/000-024
Mini-WSB Inline; for Smart Printer; 1700 pieces on roll; stretchable 5 - 5.2 mm; plain; snap-on type; violet



Item No.: 2009-145
Mini-WSB Inline; for Smart Printer; 1700 pieces on roll; stretchable 5 - 5.2 mm; plain; snap-on type; white



Item No.: 2009-145/000-002
Mini-WSB Inline; for Smart Printer; 1700 pieces on roll; stretchable 5 - 5.2 mm; plain; snap-on type; yellow



Item No.: 248-501/000-006
Mini-WSB marking card; as card; not stretchable; plain; snap-on type; blue



Item No.: 248-501/000-007
Mini-WSB marking card; as card; not stretchable; plain; snap-on type; gray



Item No.: 248-501/000-023
Mini-WSB marking card; as card; not stretchable; plain; snap-on type; green



Item No.: 248-501/000-017
Mini-WSB marking card; as card; not stretchable; plain; snap-on type; light green



Item No.: 248-501/000-012
Mini-WSB marking card; as card; not stretchable; plain; snap-on type; orange



Item No.: 248-501/000-005
Mini-WSB marking card; as card; not stretchable; plain; snap-on type; red



Item No.: 248-501/000-024
Mini-WSB marking card; as card; not stretchable; plain; snap-on type; violet



Item No.: 248-501
Mini-WSB marking card; as card; not stretchable; plain; snap-on type; white



Item No.: 248-501/000-002
Mini-WSB marking card; as card; not stretchable; plain; snap-on type; yellow



Item No.: 793-5501/000-006
WMB marking card; as card; for terminal block width 5 - 17.5 mm; stretchable 5 - 5.2 mm; plain; snap-on type; blue



Item No.: 793-5501/000-007
WMB marking card; as card; for terminal block width 5 - 17.5 mm; stretchable 5 - 5.2 mm; plain; snap-on type; gray



Item No.: 793-5501/000-023
WMB marking card; as card; for terminal block width 5 - 17.5 mm; stretchable 5 - 5.2 mm; plain; snap-on type; green



Item No.: 793-5501/000-017
WMB marking card; as card; for terminal block width 5 - 17.5 mm; stretchable 5 - 5.2 mm; plain; snap-on type; light green



Item No.: 793-5501/000-012
WMB marking card; as card; for terminal block width 5 - 17.5 mm; stretchable 5 - 5.2 mm; plain; snap-on type; orange



Item No.: 793-5501/000-005
WMB marking card; as card; for terminal block width 5 - 17.5 mm; stretchable 5 - 5.2 mm; plain; snap-on type; red

Item No.: 793-5501/000-024
WMB marking card; as card; for terminal block width 5 - 17.5 mm; stretchable 5 - 5.2 mm; plain; snap-on type; violet

Continued on next page

1.2.6.2 Marker

Item No.: 793-5501
WMB marking card; as card; for terminal block width 5 - 17.5 mm; stretchable 5 - 5.2 mm; plain; snap-on type; white



Item No.: 793-5501/000-002
WMB marking card; as card; for terminal block width 5 - 17.5 mm; stretchable 5 - 5.2 mm; plain; snap-on type; yellow



Item No.: 2009-115/000-006
WMB-Inline; for Smart Printer; 1500 pieces on roll; stretchable 5 - 5.2 mm; plain; snap-on type; blue



Item No.: 2009-115/000-007
WMB-Inline; for Smart Printer; 1500 pieces on roll; stretchable 5 - 5.2 mm; plain; snap-on type; gray



Item No.: 2009-115/000-023
WMB-Inline; for Smart Printer; 1500 pieces on roll; stretchable 5 - 5.2 mm; plain; snap-on type; green



Item No.: 2009-115/000-017
WMB-Inline; for Smart Printer; 1500 pieces on roll; stretchable 5 - 5.2 mm; plain; snap-on type; light green



Item No.: 2009-115/000-012
WMB-Inline; for Smart Printer; 1500 pieces on roll; stretchable 5 - 5.2 mm; plain; snap-on type; orange



Item No.: 2009-115/000-024
WMB-Inline; for Smart Printer; 1500 pieces on roll; stretchable 5 - 5.2 mm; plain; snap-on type; violet



Item No.: 2009-115
WMB-Inline; for Smart Printer; 1500 pieces on roll; stretchable 5 - 5.2 mm; plain; snap-on type; white



Item No.: 2009-115/000-002
WMB-Inline; for Smart Printer; 1500 pieces on roll; stretchable 5 - 5.2 mm; plain; snap-on type; yellow

1.2.6.3 Marker carrier



Item No.: 2002-161
Adaptor; gray



Item No.: 2009-198
Adaptor; gray

1.2.6.4 Marking strip



Item No.: 2009-110
Marking strips; for Smart Printer; on reel; not stretchable; plain; snap-on type; white

1.2.7 Plug

1.2.7.1 Component module with diode



Item No.: 2002-880/1000-411
Component plug; 2-pole; with diode 1N4007; 10.4 mm wide; Operating temperature 85°C max.; gray

1.2.7.2 Component module with LED



Item No.: 2002-880/1000-541
Component plug; 2-pole; LED (red); 10.4 mm wide; Operating temperature 85°C max.; gray



Item No.: 2002-880/1000-836
Component plug; 2-pole; LED (red); 10.4 mm wide; Operating temperature 85°C max.; gray



Item No.: 2002-880/1000-542
Component plug; 2-pole; LED (red); 10.4 mm wide; Operating temperature 85°C max.; multicoloured

 Continued on next page

1.2.7.3 Diodenstecker



Item No.: 2002-880/1000-411
Component plug; 2-pole; with diode 1N4007; 10.4 mm wide; Operating temperature 85°C max.; gray

1.2.7.4 Empty component plug housing



Item No.: 2002-880
Empty component plug housing; 10.4 mm wide; 2-pole; Type 4; gray

1.2.7.5 LED-Stecker



Item No.: 2002-880/1000-541
Component plug; 2-pole; LED (red); 10.4 mm wide; Operating temperature 85°C max.; gray



Item No.: 2002-880/1000-836
Component plug; 2-pole; LED (red); 10.4 mm wide; Operating temperature 85°C max.; gray



Item No.: 2002-880/1000-542
Component plug; 2-pole; LED (red); 10.4 mm wide; Operating temperature 85°C max.; multicoloured

1.2.8 Push-in type wire jumper

1.2.8.1 Jumper



Item No.: 2009-414
Push-in type wire jumper; 1.5 mm²; insulated; 110 mm long; black



Item No.: 2009-414/000-005
Push-in type wire jumper; 1.5 mm²; insulated; 110 mm long; black



Item No.: 2009-416
Push-in type wire jumper; 1.5 mm²; insulated; 250 mm long; black



Item No.: 2009-414/000-006
Push-in type wire jumper; insulated; 110 mm long; black



Item No.: 2009-412
Push-in type wire jumper; insulated; 60 mm long; black

1.2.9 Test and measurement

1.2.9.1 Testing accessories



Item No.: 2002-560
Modular TOPJOB®S connector; modular; for jumper contact slot; 10-pole; 2,50 mm²; gray



Item No.: 2002-511
Modular TOPJOB®S connector; modular; for jumper contact slot; 1-pole; 2,50 mm²; gray



Item No.: 2002-552
Modular TOPJOB®S connector; modular; for jumper contact slot; 2-pole; 2,50 mm²; gray



Item No.: 2002-553
Modular TOPJOB®S connector; modular; for jumper contact slot; 3-pole; 2,50 mm²; gray



Item No.: 2002-554
Modular TOPJOB®S connector; modular; for jumper contact slot; 4-pole; 2,50 mm²; gray



Item No.: 2002-555
Modular TOPJOB®S connector; modular; for jumper contact slot; 5-pole; 2,50 mm²; gray



Item No.: 2002-556
Modular TOPJOB®S connector; modular; for jumper contact slot; 6-pole; 2,50 mm²; gray



Item No.: 2002-557
Modular TOPJOB®S connector; modular; for jumper contact slot; 7-pole; 2,50 mm²; gray



Item No.: 2002-558
Modular TOPJOB®S connector; modular; for jumper contact slot; 8-pole; 2,50 mm²; gray



Item No.: 2002-559
Modular TOPJOB®S connector; modular; for jumper contact slot; 9-pole; 2,50 mm²; gray



Item No.: 2002-549
Spacer module; modular; e.g., for bridging commoned terminal blocks; gray

Item No.: 2009-174
Test plug adapter; for 4 mm Ø test plugs; for testing TOPJOB®S rail-mounted terminal blocks; gray

Continued on next page

1.2.9.1 Testing accessories



Item No.: 210-136
Test plug; 2 mm Ø; with 500 mm cable; red



Item No.: 2009-182
Testing tap; for max. 2.5 mm²; tool-free connection for individual test wires 0.08 - 2.5 mm; gray



Item No.: 2002-649
TOPJOB®S L-type spacer module; modular; e.g., for bridging commoned terminal blocks; gray



Item No.: 2002-611
TOPJOB®S L-type test plug module; modular; 1-pole; 2,50 mm²; gray

1.2.10 Tool

1.2.10.1 Operating tool



Item No.: 210-658
Operating tool; Blade: 3.5 x 0.5 mm; with a partially insulated shaft; angled; short; multicoloured



Item No.: 210-720
Operating tool; Blade: 3.5 x 0.5 mm; with a partially insulated shaft; multicoloured

Installation Notes

Conductor termination



All conductor types at a glance

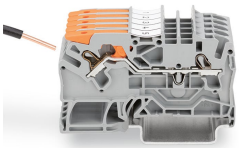

Push-in termination of solid conductors

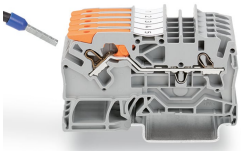

Push-in termination of fine-stranded conductors with ferrules

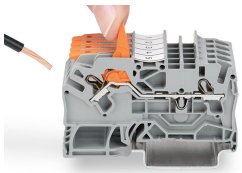

Pull the lever up until it stops, then connect the fine-stranded conductor.



Push the lever back down – done!

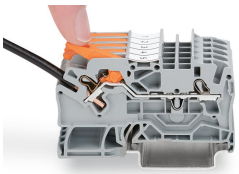

Push the lever back down – done!

Commoning

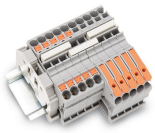

Insert a push-in type jumper bar and push down until it hits the backstop.



Commoning with step-down jumpers.

Testing



Testing with a 2 mm Ø test plug (max. 42 V).

Continued on next page

Marking

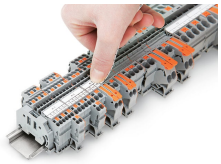

Snapping a marking strip into a marker slot.

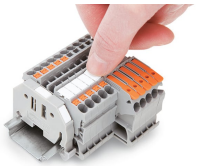

Snapping a marking strip into the marker slot.